卷册检索号 SEARCH NO. OF THE VOLUME
MLHVDC-LCS-ECI-DD-CS-0217 30-B003701S-T0217

图纸文件目录（首页）

CATALOG OF DRAWING DOCUMENTS (HEAD PAGE)

拉合尔±660kV换流站 工程 施工图 阶段
±660kV Lahore Converter Station PROJECT Detail Design DESIGN STAGE

结构 专业 第 02 卷 第 17 册
Structure SPECIALITY VOLUME BOOK

卷册 名称 备用平抗室结构图
Volume Name Structure drawings for standby smoothing reactor house

批 准 APPROVED BY	
审 核 REVIEWED BY	
设计/勘测 DESIGNED BY/ SURVEYED BY	郭彩娟
图纸 3 张 DRAWING NOS.	打印件 0 本 PRINTED COPIES NOS.

序号 No.	图 号 DRAWING NO.	文件名称 DOCUMENT TITLE	版本 EDITION	张 NOS.	本 NOS.	备注 REMARKS
1	30-B003701S-T0217-001	备用平抗室总说明 General specification for standby smoothing reactor house	A	1		
2	30-B003701S-T0217-002	备用平抗室基础平面布置图 Plan layout of foundation for standby smoothing reactor house	A	1		
3	30-B003701S-T0217-003	备用平抗室结构平面布置图 Plan layout of structure for standby smoothing reactor house	A	1		

注:

1 工程概况 project profile:

1.1 本说明为备用平抗室结构设计说明。

1.1 The general specification is for standby smoothing reactor house。

1.2 结构型式：钢框架结构，屋盖为轻型钢结构屋盖，基础采用柱下承台+灌注桩的形式。

1.2 Structural system: steel frame column, light steel roof, The foundation style of this project is pile cap+cast-in-place piles.

2 设计依据的规范，规程及规定 design code:

ASCE 7-10 Minimum Design Loads for Buildings and Other Structures
ACI 530-02 building code requirements for masonry structures
ACI 318-14-2014 building code requirements for structural concrete building code of pakistan
ASTM C 1218/C 1218M-1999 Test Method for Water-Soluble Chloride in Mortar and Concrete
Uniform Building Code 1997
ASTM A 615/A 615M-1 Standard Specification for Deformed and Plain Billet-Steel Bars for Concrete Reinforcement.

3. 主要设计条件 design requirements:

3.1 本工程建筑抗震根据UBC97反应谱 Ca=0.22，Cv=0.32，场地土类别SD；地震区域 ZONE 2A。

3.1 The earthquake parameter according to UBC97 response spectrum is Ca=0.22, Cv=0.32; site soil style is SD, earthquake region ZONE 2A。

3.2 地下水对混凝土结构的暴露类别为S1，场地土对混凝土结构的暴露类别为S0，对钢筋混凝土结构中钢筋的暴露类别为C1。

3.2 The exposure style of underground water to concrete structure is S1, the exposure style of site soil to concrete structure is S0, the exposure style of site soil to steel bar is C1.

3.3 屋面荷载标准值 roof load:

3.3.1 屋面恒荷载（含檩条自重）：roof dead load (include purline self weight 1.00KN/m^2)

3.3.2 屋面活荷载：roof live load 0.50（KN/m^2）

（未经设计单位同意，施工，使用过程中荷载标准值不得超过上述荷载限值）

(Load should not surpass limit above during construction and design unless is authorized)

3.3.3 基本风压 basin wind pressure 0.748 kN/m2；

4 钢结构材料 steel structure material

4.1 钢材：全部钢材应按现行国家标准和规范保证抗拉强度、伸长率、屈服强度、冷弯实验和碳、硫、磷含量的限值。屋面钢梁、檩条、拉条、隅撑及撑杆均采用Q235B。

4.1 steel: all steel should comply with national code and standard requirements to ensure tensile strength、elongation、yield strength、cold bend inspection and prohibitive content of carbon、sulphur、phosphorus. Roof steel beam、purline、brace、angle brace and brace rod all use Q235B.

4.2.螺栓bolt:

4.2.1.高强螺栓性能等级为10.9级，扭剪型螺杆及螺母，垫圈应符合<<钢结构用扭剪型高强度螺栓连接的技术条件>>(GB/T3632-2008)的规定；大六角型及配套的螺母、垫圈，应符合《钢结构用高强度大六角头螺栓，大六角头螺母，垫圈与技术条件>>(GBT1231-2006)的规定，高强度螺栓的设计预拉力值按<<钢结构设计规范>>(GL50017-2003)的规定采用。

4.2.1.High strength bolt grade10.9, twist-shear style screw and nut, gasket should comply with requirements in GB/T3632-2008; Large hexagonal type screw and nut,gasket should comply with requirements in GBT1231-2006, design pretension force should comply with requirements in GL50017-2003.

4.2.2.M16螺栓预拉力值100kN；M20螺栓预拉力值155kN。

4.2.2.Design pretension force of M16 is 100KN,design pretension force of M20 is 155KN。

4.2.3.高强螺栓连接钢材的摩擦面应为"喷砂"处理，抗滑移系数为>=0.45并应符合<<钢结构高强度螺栓连接的设计，施工及验收规程>>(JGJ 82-2011)的规定。

4.2.3.The friction surface of high strength bolt connection steel material should use sand blast measures, slip-resisting factor should >=0.45 as well as comply with requirements in JGJ 82-2011.

4.2.4.普通螺栓采用C级及配套的螺母、垫圈，C级螺栓孔

4.2.4.Plain bolt should use C class and relevant gasket, C class bolt hole.

4.3锚栓：采用符合现行国家规范标准<<碳素结构钢>>(GB/T 700-2006)规定的Q345B钢材制成。

4.3 Anchor bolt: should use Q345B steel which comply with requirements in GB/T 700-2006.

4.4.焊接材料 welding material

4.4.1.手工焊接用焊条：Q235B钢材用的焊条型号为E4315、E4316，Q345B钢采用的焊条型号为E5015、E5016，应符合现行国家标准<<碳钢焊条>>的规定；所选用的焊条型号应与主体金属相匹配。不同强度的钢材焊接时，焊接材料的强度应按强度较低的钢材采用。

4.4.1.Handwork welding rod: welding rod style for Q235B is E4315、E4316 welding rod style for Q345B is E5015、E5016, should comply with requirements in <carbon steel welding rod>; welding rod style should match with main structure metal. When welding different strength steel,strength of welding material should use the lower one。

4.4.2.自动焊或半自动焊接采用的焊丝和焊剂，应与主体金属强度相适应，且其熔敷金属的抗拉强度不应小于相应手工焊条的抗拉强度。Q235B钢、Q345B钢采用的焊条，焊丝应分别符合<<建筑钢结构焊接技术规程>>的要求。

4.4.2. Welding stick and soldering flux in auto-welding or semi auto-welding should be in keeping with main structure metal strength, and the metal strength should not be smaller than relevant tensile strength of handwork welding rod. Welding rod used for Q235B and Q345B should comply with <building steel structure welding technical standard>.

4.4.3.焊接质量等级：全熔透焊缝的质量等级均为二级，并应符合与母材等强的要求。

全熔透焊缝的端部应设置引弧板，引弧板的材质应与焊件相同。手工焊引弧板厚度8mm，焊缝引出长度大于或等于25mm。

4.4.3. Welding quality grade: full penetration welding line class is grade 2,and meet the requirements that welding line has equal strength with mother material. Full penetration should set end tab at telos, the material of end tab should be the same as welding material. The thickness of end tab is 8mm, the length welding line should be more than 25mm.

4.4.4钢结构除锈和防腐：所有钢构件除锈等级应达到Sa2$\frac{1}{2}$级。预埋件均采用热镀锌防腐。

钢结构采用防腐漆防腐；其中屋面钢梁和吊车梁等需进行面层防火保护，

其涂装组成为：底漆两遍（每遍不小于40μm）、中间漆两遍（每遍不小于70μm）、

面层防火保护（由专业厂家根据耐火时间要求设计）；其余无需进行防火保护的钢结构，

其涂装组成为：底漆两遍（每遍不小于40μm）、中间漆两遍（每遍不小于70μm）、

面漆两遍（每遍不小于40μm）。

钢结构除锈和防腐做法未尽事宜详见本工程建筑钢结构技术规范书。

4.4.4. Steel structure rust removal and anticorrosion: all steel member should reach Sa2$\frac{1}{2}$ class. Built-in fitting should use hot-galvanizing method.

steel structure should use anti-corrasion coating; roof steel beam and crane beam should use fire-proofing coating.

Coating: Bottom coating twice (no less than 40μm each time)
Middle coating twice (no less than 70μm each time)
Coating fire proofing(design according to fire endurance time by manufacturer)

Coating for non fire proofing steel structure: Bottom coating twice (no less than 40μm each time)
Middle coating twice (no less than 70μm each time)
Surface coating twice (no less than 40μm each time)

Other requirements which is not specified should check steel structure code.

5 钢结构制作安装 steel structure manufacture and installation:

5.1.钢结构的制作、安装、施工及验收应符合《钢结构工程施工质量验收规范》的要求。

5.1.Manufacture、installation、construction and acceptance should meet requirements in <code for acceptance of construction quality of steel structures>.

5.2.焊接质量 welding quality:

5.2.1对梁翼缘和腹板的拼接，应采用加引弧板（其厚度和坡口与母材相同）的对接焊缝，并保证全熔透焊缝质量等级应符合二级焊缝质量标准。

5.2.1The welding of beam flange and web should use end tab with welding line (the thickness and groove should be same as mother material).

5.2.2刚架构件的翼缘与端板的连接应采用全熔透对接焊缝，腹板与端板的连接应采用与腹板等强的角焊缝，坡口形式应符合国标GB/T985的规定。焊缝质量应符合二级焊缝质量验收标准.

5.2.2The welding of truss flange and web should use full penetration welding line, The welding of flange and end plate should fillet welding line which has equal strength with web, groove should meet requirements in GB/T985. The quality of welding line should meet grade2 welding line quality acceptance standard.

5.2.3其余部分，焊缝的外观质量标准为三级。

5.2.3 For other part,welding line appearance quality standard should meet grade 3.

5.3 要求探伤的焊缝，其内部缺陷应符合现行国家标准《焊缝无损检测超声检测技术、检测等级和评定》GB/T11345-2013和《钢结构工程施工质量验收规范》GB50205-2001的有关规定。

5.3 Welding line with flaw detection requirements, internal flaw should meet requirements in GB/T11345-2013 and GB50205-2001.

5.4 所有需要拼接的构件一律要用等强拼接，上、下翼缘和腹板中的拼接焊缝位置应错开，并避免与加劲板重合，腹板拼接焊缝与它平行的加劲板至少相距200，腹板拼接与上、下翼缘拼接焊缝至少相距200.

5.4 All welding members should use equal strength welding, welding place in both flanges and web should in different places to avoid superposition with stiffening plate,welding line for web should be more than 200 away from the paralleled stiffening plate, and more than 200 away from both flanges welding line.

5.5. 设计中凡是未注明的焊缝均为满焊，焊缝高度为 h_f=6mm。

5.5. Welding line which is specified in drawings is full weld,height of welding line h_f=6mm。

5.6. 屋面板之间的连接及面板与檩条的连接，宜采用带橡皮垫圈的自钻自攻螺丝。螺丝间距不应大于300mm,屋脊、采光带和檐口处自攻螺丝间距应适当加密。

5.6. Connecting of roof slabs as well as connecting between roof slabs and purlines,should use self drilling and self tapping screw. The gap between screws should not be more than 300mm, the gap between self tapping screw at ridge、daylighting band and cornice should be smaller.

5.7. 所有构件的重量及尺寸仅供参考，实际以最后放样下料为准，所有构件均需按1:1比例放样或号料。所有钢构件在出厂前应进行自由状态预拼装，拼装的允许偏差应符合相关规范的要求。

5.7. All self weight and member in the drawing is only for reference, actural data should check lay off, all member should be laying off as 1:1 scale. All steel members should be pre-assembly freely, bias of assembling should meet requirements in relevant codes.

6.钢结构涂装 Steel structure coating.

6.1 钢构件除锈质量等级要求达到Sa2$\frac{1}{2}$级。表面处理后到涂底漆的时间间隔不应超过6小时，此期间表面应保持洁净，严禁沾水、油污等。

6.1 steel member should reachSa2$\frac{1}{2}$ grade。The time between surface handling and bottom coating should be no more than 6hours, surface should keep clean and away from water and oil.

6.2 涂装应在适宜的温度、湿度和清洁的环境中进行：

6.2 coating should be processing in appropriate temperature、humidity and clean environment:

6.2.1 涂装固化温度应符合涂料产品说明书的要求；

6.2.1 coating curing temperature should comply with coating product booklet;

6.2.2 施工环境相对湿度不应大于85%，构件表面有结露时不得涂装；

6.2.2 relevant humidity of construction environment should be no more than 85%,; coating is forbidden when moisture condensation occurs at member surface.

6.2.3 漆膜固化时间与环境温度、相对湿度和涂料品种有关，每道涂层涂装后，表面至少在4小时内不得被雨淋和沾污。

6.2.3 Curing hour of coating is related to environment temperature, relevant humidity and coating style, surface should keep away from raining and pollution for more than 4 hours after coating.

6.3 涂装工程验收应包括在中间检查和竣工验收中。

6.3 Acceptance of coating construction should be involved in middle-exam and completion acceptance。

6.4 钢结构的除锈和防腐应严格按照钢结构设计规范(GB 50017-2003)的8.9条款执行。

6.4 Steel structure rust removal and anticorrosion should strictly meet requirements in GB 50017-2003 clause 8.9.

6.5 现场焊接两侧各50mm范围内暂不涂漆，待现场焊完后，按规定补涂。

6.5 Coating at the range of 50mm at both sides of welding line should be operating after welding。

6.6 涂漆时应注意，凡是高强度螺栓连接范围内不允许涂刷油漆或油污，要求接触面进行喷砂处理，摩擦系数应达到0.45以上。施工安装前应对其摩擦系数进行复验。

6.6 Either coating and oil dirt is not allowed in the connecting range of high strength bolts,contact surface should use sand blasting method. Friction coefficient should be more than 0.45 and double checked before construction and installation.

6.7备用平抗室耐火等级为二级。根据2014版《建筑设计防火规范》规定：屋面钢梁和吊车梁等钢构件的耐火极限应达到1.5小时，当防火保护措施采用防火涂料时，防火涂料涂装方式为喷涂薄型防火涂料（厚度为7mm）。钢结构防火涂料涂装未尽事宜详见本工程钢结构防火涂料涂装招标技术规范书。

6.7The fire resistance rating of standby smoothing reactor house is grade2:
Fire resistance limits of room steel beam and crane beam should reach 1.5 hours.
When using fire-proofing coating, coating should be slim fire proofing coating(7mm thickness).
Other coating requirements not specified should check steel structure fire proofing booklet.

7.日常使用和维护要求 daily using and maintenance requirements

7.1钢结构防腐保养维护周期为3~5年，发现有锈蚀，龟裂，风化等现象时，应进行基底清理除锈，修复，重新涂装。

7.1 Steel structure corrasion-resistance maintenance period is 3~5 years, if corrasion, fracturing, air-slaking occurs, the structure should be cleaned totally, rust removal, repair and re-coating.

7.2在使用期间，应做好涂层的维护工作，如遇到剧烈震荡，机械碰撞或狂风，暴雨袭击等都有可能破坏涂层的情况，应及时修理

7.2 Coating should be maintained properly, if fierce vibrating, mechanical crash, storm and heavy rain happens, coating need to be repaired.

8.其他 others

8.1 本工程所用钢材、连接材料和涂料必须具有质量证明书，并符合设计文件的要求和国家现行有关标准的规定。

8.1 All the steel、connecting material and coating should have quality certifications, and comply with requirements in relevant standards.

8.2 本工程图示尺寸以毫米(mm)为单位，标高以米(m)为单位.

8.2 In the drawing, size unit is mm, height unit is m.

8.3 施工期间不得超负荷堆放建材和施工垃圾，特别注意梁板上集中负荷时对结构受力和变形的不利影响。

8.3 Building material and construction rubbish should not surpass load limit, negative effects of concentrated load on beams and slabs should be more concerned.

8.4 加工前钢结构供货厂家应与轻钢屋面供货厂家密切配合，确保檩托位置合理可行，保证轻钢屋面的顺利加工和安装。

8.4 Before manufacturing, steel structure manufacturer should closely cooperated with light steel roof manufacturer to ensure the location of brace is feasible, and light steel roof manufactured and installed successfully.

Reference Drawings

Drwg. No.	Title

Revisions

	Name	Date	Notes

巴基斯坦默蒂亚里—拉合尔±660kV直流输电工程

±660kV HVDC Project from Matiari to Lahore in Pakistan

NATIONAL TRANSMISSION & DESPATCH COMPANY (NTDC) LIMITED PAKISTAN

CONTRACTOR 国家电网 STATE GRID 中国电力技术装备有限公司 CHINA ELECTRIC POWER EQUIPMENT AND TECHNOLOGY CO.,LTD.

SUBCONTRACTOR East China Electric Power Design Institute Co.,Ltd.

拉合尔±660kV换流站

±660kV Lahore Converter Station

设计阶段 PHASE 施工图 Detail Design

MLHVDC-LCS-ECI-DD-CS-0217-001A

	所名 Name	日期 Date
设计 Designed	郭彩娟	
校核 Checked	赵俊	
审核 Reviewed		
批准 Approved		

备用平抗室总说明

General specification for standby smoothing reactor house

比例 Scale | 图号 DWG NO. 30-B003701S-T0217-001 | 版本 REV. A

594X841

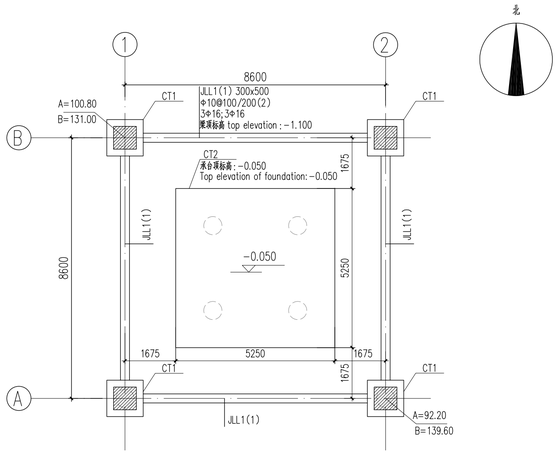

备用平抗室基础平面布置图

Plan layout of foundation for standby smoothing reactor house

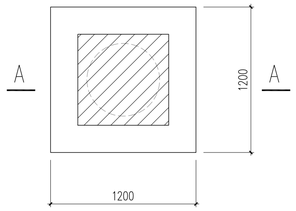

CT1

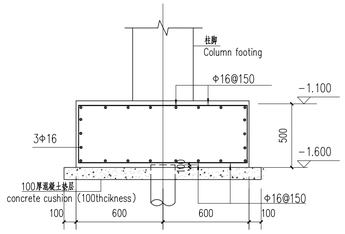

A—A

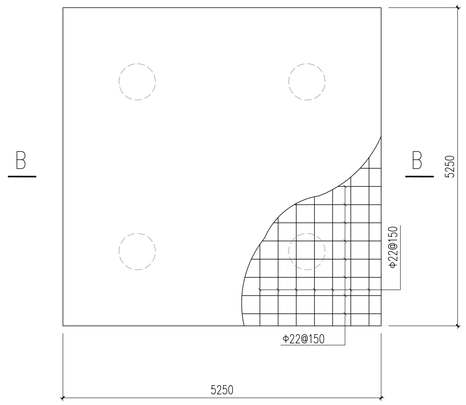

CT2

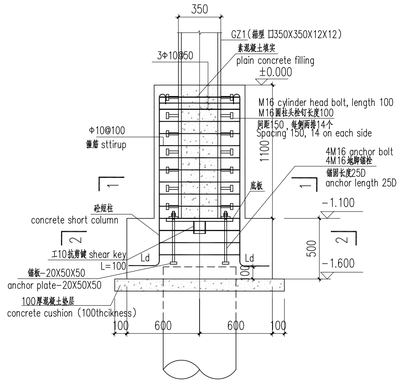

柱脚刚接详图

rigid connection detail of column footing

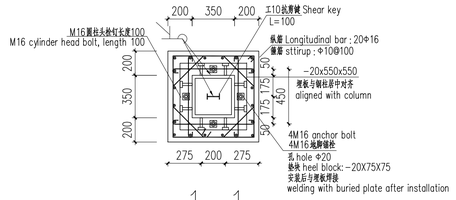

1—1

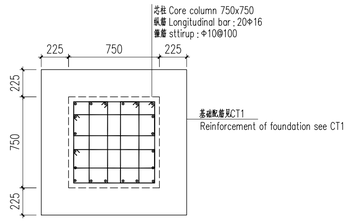

2—2

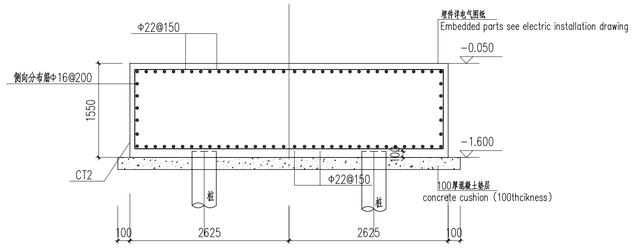

B—B

说明：

1、±0.000相当于绝对标高193.85(大地水准面EGM2008系统)，室内外高差450mm。
2、本工程基础设计依据《巴基斯坦默蒂亚里±660KV直流输电工程拉合尔±660KV换流站施工图设计阶段岩土工程勘察报告(详勘)》(B003701S-G01-01)进行。
3.未注明柱采用钢柱，截面为箱型350x350x12x12，钢材采用Q235B。
4.承台混凝土强度采用fc'=28Mpa,钢筋ASTM A615 Grade 60, fy = 420MPa。
5.除注明外承台顶标高为-1.100。
6、本工程基础采用柱下承台+灌注桩的形式。
7、本图中未注明基础定位与柱居中对齐,未注明的柱按轴线居中或与墙平齐。
8.未注明承台垫层采用100厚fc'=21Mpa混凝土。
9. 地下混凝土要求：
1)水胶比不大于0.50；
2)最大氯离子含量(水泥用量的百分比)：0.10；测试方法参《ASTM C 1218M》。
3)水泥型号：采用抗硫酸盐的硅酸盐水泥，水泥型号需满足《ACI 318-14》表19.3.2.1对应于暴露等级S1的水泥种类要求(ASTM C150 或ASTM 595 或ASTM C1157对应的类别)；
4)水泥中掺入矿物掺合料(矿物掺合料的掺量、使用方法和耐腐蚀性能按相应产品的使用说明并经验证后确定)。
10.建筑完成面到天然地坪之间填土需采用好土回填，并分层夯实，压实系数不小于0.94。
11.本工程初设设计尚未审定，未通过NTDC审核，桩基存在修改的可能，施工前请联系业主与设计确认。
12.混凝土保护层要求详见30-B003701S-T0233-001。
13.本层梁钢筋锚入柱中。

Specification :

1. The indoor elevation of ±0.000 is equal to the absolute elevation of193.85 (geodestic datum system EGM2008) If not specified,the elevations of the project are adopt to the relative elevation.The interior and outdoor dispersion is 450mm.
2 .The foundation design of the project proceeds according to《The geotechnical engineering investigation report(Detail survey) of drawing construction design phase of ±660KV converter station in Lahore in Pakistan Matiari ±660KV HVDC project》(B003701S-G01-01).
3.Steel column is used in this structure, which cross section is box 350 x350x12x12, adopting Q235B.
4.The strength of concrete used in foundation is fc'=28Mpa,reinforcement ASTM A615 Grade 60, fy = 420MPa.
5.The height of the top of the foundation is -1.100(if not specified).
6.The foundation style of this project is pile cap+cast-in-place piles.
7、Foundations are symmetric on the middle of the columns(if not specified), columns are symmetric on the middle of the axis or parallel and level to the edge of the wall(if not specified),
8.The strength of concrete used in cushion is fc'=21Mpa.
9. Requirements for Underground Concrete:
1) Maximum water-cement ratio is 0.50;
2) Maximum water-soluble chloride ion content is 0.1;Test method refers to "ASTM C 1218M".
3) Type of Concrete: Concrete should be made of sulfate-resistance silica cement.Cement type should fulfill the requirements for concrete used in exposure grade S1, according to《ACI 318-14》table 19.3.2.1.(ASTM C150,ASTM 595 or ASTM C1157 corresponding cement type).
4) Add mineral admixtures (the dosage, using method and anti-corrosion ability should be tested according to the product manual)
10.The gap between the architectural floor and natural floor should be refilled with good quality soil and tamped by layers, the compacting factor should be more than 0.94.
11.The initial design of the project has not yet been approved by NTDC, the pile foundation is possible to amend.Please contact the owner and designer before construction.
12.Requirements for concrete cover are detailed in 30-B003701S-T0233-001.
13.Reinforcement in the beam should anchor into the column.

Reference Drawings

Drwg. No.	Title

Revisions

	Name	Date	Notes

巴基斯坦默蒂亚里—拉合尔±660kV直流输电工程

±660kV HVDC Project from Matiari to Lahore in Pakistan

NATIONAL TRANSMISSION & DESPATCH COMPANY (NTDC) LIMITED PAKISTAN

CONTRACTOR 国家电网 STATE GRID 中国电力技术装备有限公司 CHINA ELECTRIC POWER EQUIPMENT AND TECHNOLOGY CO.,LTD.

SUBCONTRACTOR East China Electric Power Design Institute Co.,Ltd.

拉合尔±660kV换流站

±660kV Lahore Converter Station

设计阶段 PHASE: 施工图 Detail Design

MLHVDC-LCS-ECI-DD-CS-0217-002A

	姓名 Name	日期 Date
设计 Designed	郭彩娟	
校核 Checked	聂俊	
审核 Reviewed	王海川	2025.5.28
批准 Approved	王海涛	

备用平抗室基础平面布置图

Plan layout of foundation for standby smoothing reactor house

比例 Scale | 图号 DWG. NO. 30-B003701S-T0217-002 | 版本 REV. A

594X841

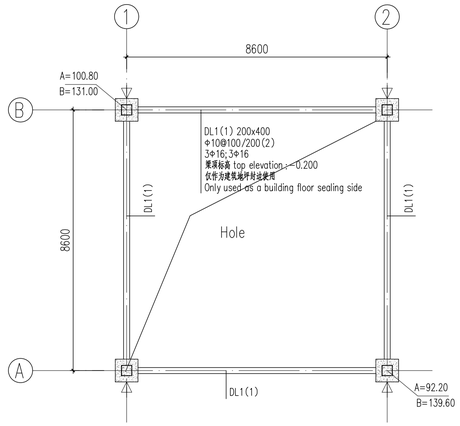

备用平抗室首层平面布置图 -0.200

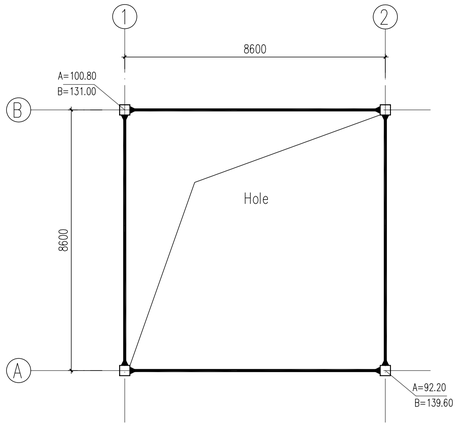

备用平抗室结构平面布置图 5.500

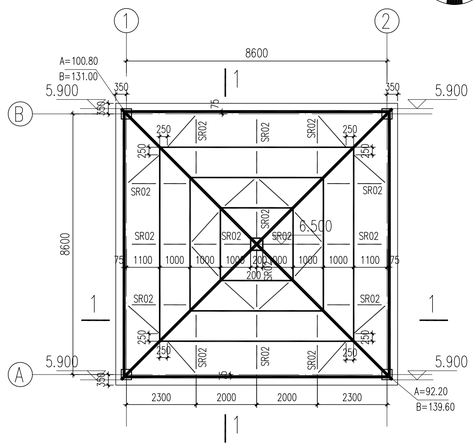

可拆卸屋盖体系 5.900~6.500

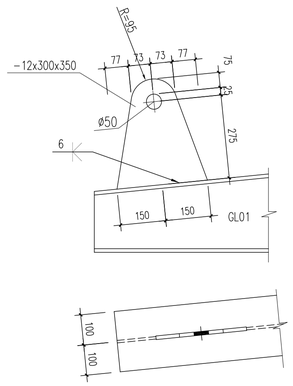

起重起吊块详图

Lifting embedded parts

钢结构截面表			
梁编号	截面尺寸(mm)（宽x高x腹板厚x翼缘厚）	材质	备注
GZ01	箱型350X350X12X12	Q235B	框架柱
GL01	H400~987X200X16X16	Q235B	屋脊梁
GL02	H400X200X8X12	Q235B	环梁
LT01	SZ180X70X20X2.5	Q235B	Z型冷弯薄壁
SR01	Φ12圆钢	Q235B	直拉条、斜拉条
SR02	Φ12+Φ30x2.0钢套管	Q235B	撑杆

Section table of steel structure			
No.	Size of section(mm) (High x width x web thick x flange thickness)	Material	Note
GZ01	Box section 350X350X12X12	Q235B	Column
GL01	H400~987X200X16X16	Q235B	Ridge beam
GL02	H400X200X8X12	Q235B	Ring beam
LT01	SZ180X70X20X2.5	Q235B	Z cold formed thin wall
SR01	Φ12 bar	Q235B	Straight brace and diagonal brace
SR02	Φ12 bar+Φ30x2.0 steel sleeve	Q235B	Brace rod

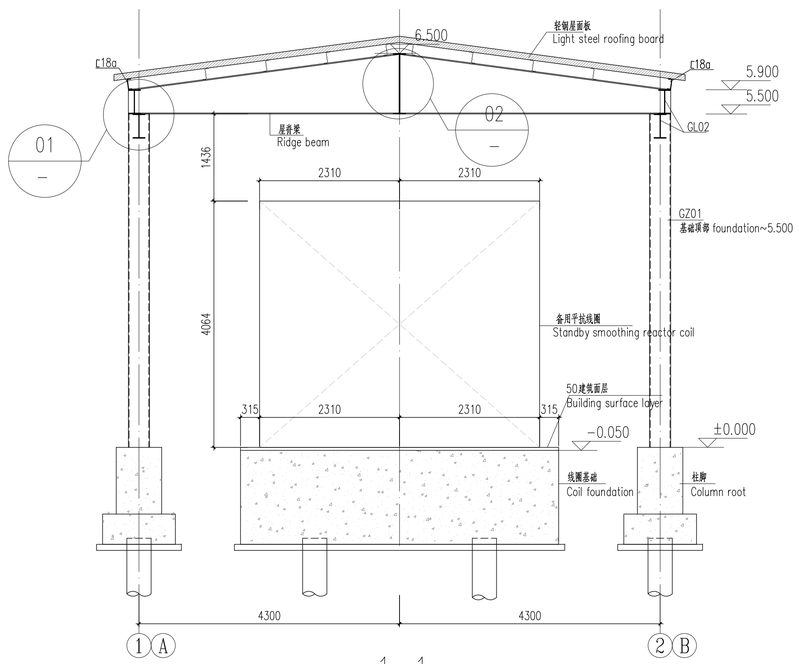

1-1

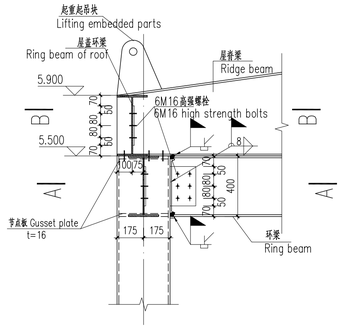

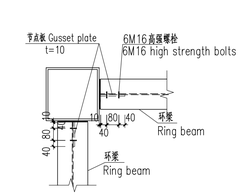

A-A

柱顶节点详图

The top of column

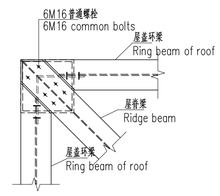

B-B

屋盖体系屋脊梁连接

The connection of ridge beam

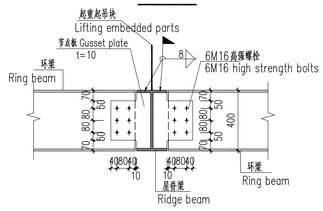

屋盖体系环梁连接

The connection of roof ring beam

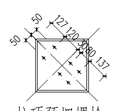

柱顶预埋螺栓

Bolts in the top of column

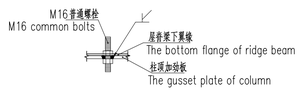

柱顶螺栓固定详图

Column bolt detail

说明：

1、本层钢材采用Q235B。屋盖为轴对称结构，采用彩钢板屋面，自重不得大于1.0kN/m2。
2、除特殊注明外，檩条为LT01，直拉条、斜拉条为SR01，撑杆为SR02。
3、图中所示钢梁定位均为中心线，图中▶所示为梁柱、梁梁刚接，未注明连接方式均为铰接。
4.首层梁为混凝土梁，强度采用fc'=28Mpa，钢筋ASTM A615 Grade 60，fy = 420MPa。
5、⊳ 表示沉降观测点位置(共4处)，具体做法详见总说明。
6、本层梁钢筋锚入柱中。
7.本工程初设设计尚未审定，未通过NTDC审核，存在修改的可能，施工前请联系业主与设计确认。
8.混凝土保护层要求详见30-B003701S-T0233-001。

Specification：

1. The material of steel adopts Q235B. The roof is the axisymmetric structure, and colored steel plate is used, which self weight must not be greater than 1.0kN/m2.
2. Except for special indication, the purline is LT01, and the straight line is SR01, and the brace rod and slant bar are SR02.
3. The positioning of the steel girder in the figure is center line. The sign ▶ in the drawing signify rigid connection, and else unmarked joints are hinge joints.
4. The strength of concrete used in the first floor beams is fc'=28Mpa, reinforcement ASTM A615 Grade 60, fy = 420MPa.
5. ⊳ represents settlement observation points(4 in total), which is shown in general specification.
6. Reinforcement in the beam should anchor into the column.
7. The initial design of the project has not yet been approved by NTDC, the drawing is possible to amend.Please contact the owner and designer before construction.
8.Requirements for concrete cover are detailed in 30-B003701S-T0233-001.

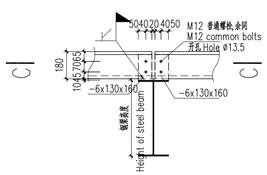

钢梁上檩条节点详图

The joint detail of purline

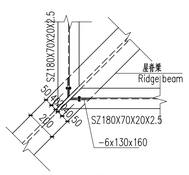

C-C

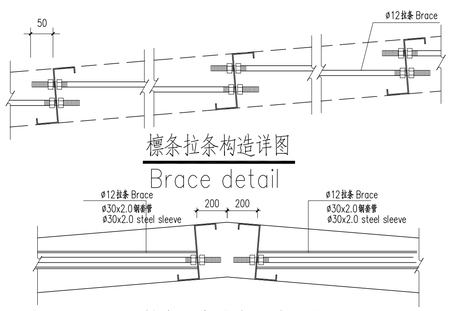

檩条拉条构造详图

Brace detail

檩条拉条屋脊构造详图

Brace detail in the brige

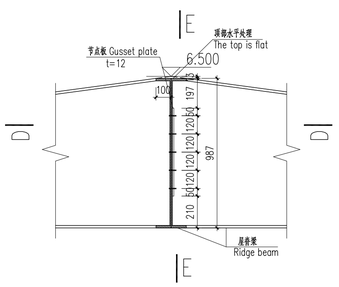

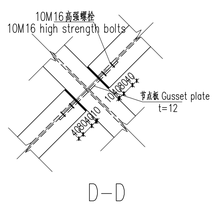

D-D

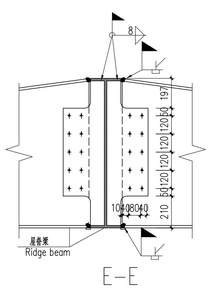

E-E

Reference Drawings

Drwg. No.	Title

Revisions

Name	Date	Notes

巴基斯坦默蒂亚里—拉合尔±660kV直流输电工程

±660kV HVDC Project from Matiari to Lahore in Pakistan

NATIONAL TRANSMISSION & DESPATCH COMPANY (NTDC) LIMITED PAKISTAN

CONTRACTOR 国家电网 STATE GRID 中国电力技术装备有限公司

SUBCONTRACTOR East China Electric Power Design Institute Co.,Ltd.

拉合尔±660kV换流站

±660kV Lahore Converter Station

设计阶段 PHASE: 施工图 Detail Design

M L H V D C - L C S - E C I - D D - C S - 0 2 1 7 - 0 0 3 A

	姓名 Name	日期 Date
设计 Designed	郭彩娟	
校核 Checked	赵俊	
审核 Reviewed		
批准 Approved		
比例 Scale		

备用平抗室结构平面布置图

Plan layout of structure for standby smoothing reactor house

图号 DWG NO. 30-B003701S-T0217-003

版本 REV. A

594X841